Series and branching circuits

Demonstration

Experiments to show that current (and therefore charge) is conserved around a circuit. They can be teacher demonstrations or student revision experiments.

Apparatus and materials

Battery, 12 V or low-voltage DC power supply

Ammeters (0 - 1 A), DC, 6

Lamps (12 V 6 W) in holders, 2

Rheostat (10 - 20 ohms) rated at 5 A at least

Health & Safety and Technical notes

Read our standard health & safety guidance [1]

For this reason it is a good idea if they are mounted in the vertical plane (preferably attached to a board) so that the layout can readily be seen.

In a demonstration of this nature where a very clear display is required, it is advisable to use straight, stiff bare copper wire and to make T connections with crocodile clips.

If digital ammeters are used, it might be helpful with some classes to cover up the least-significant digit on the display.

Procedure

---

a Set up the circuit shown.

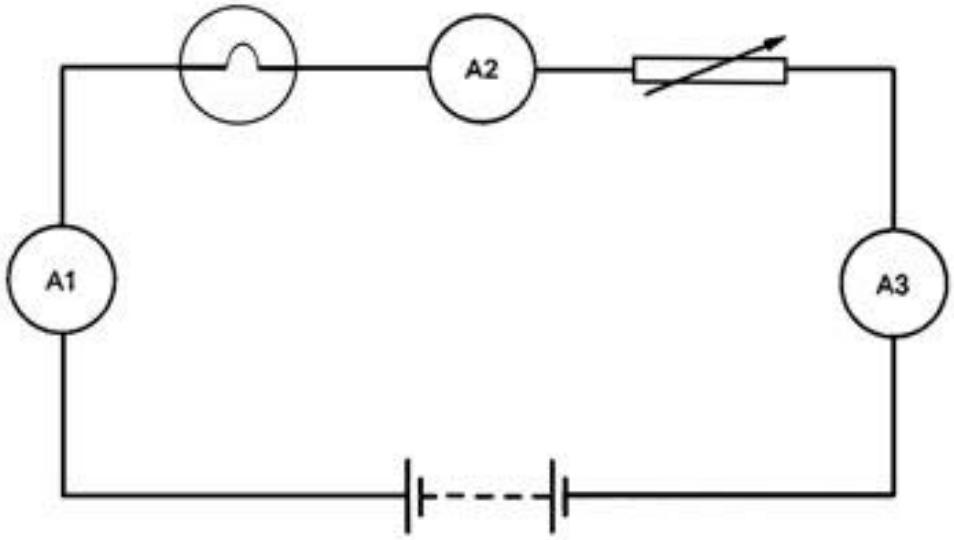

Adjust the current to a suitable value (such as 0.4 A) by means of the rheostat. It would also be instructive to include a fourth meter between two of the cells in the battery if the battery permits this.

b As a simple branching circuit, set up the following:

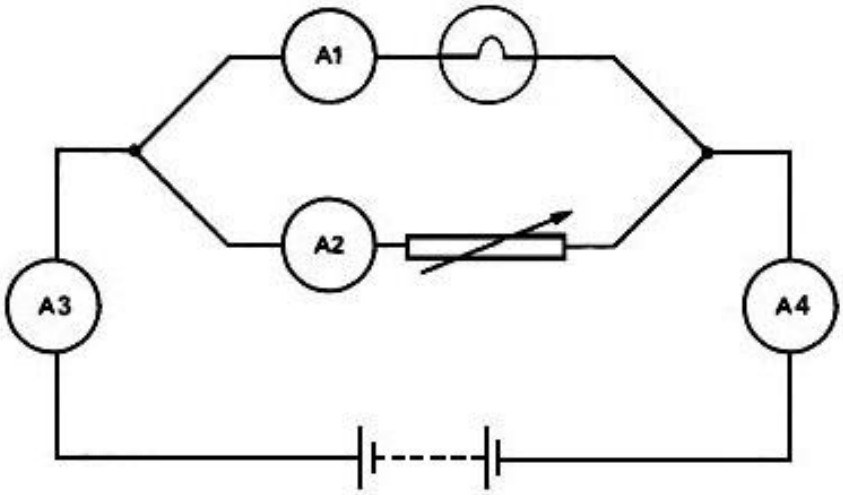

Point out that the currents in the two branches add up to the current in the main circuit.

c Finally, set up the following:

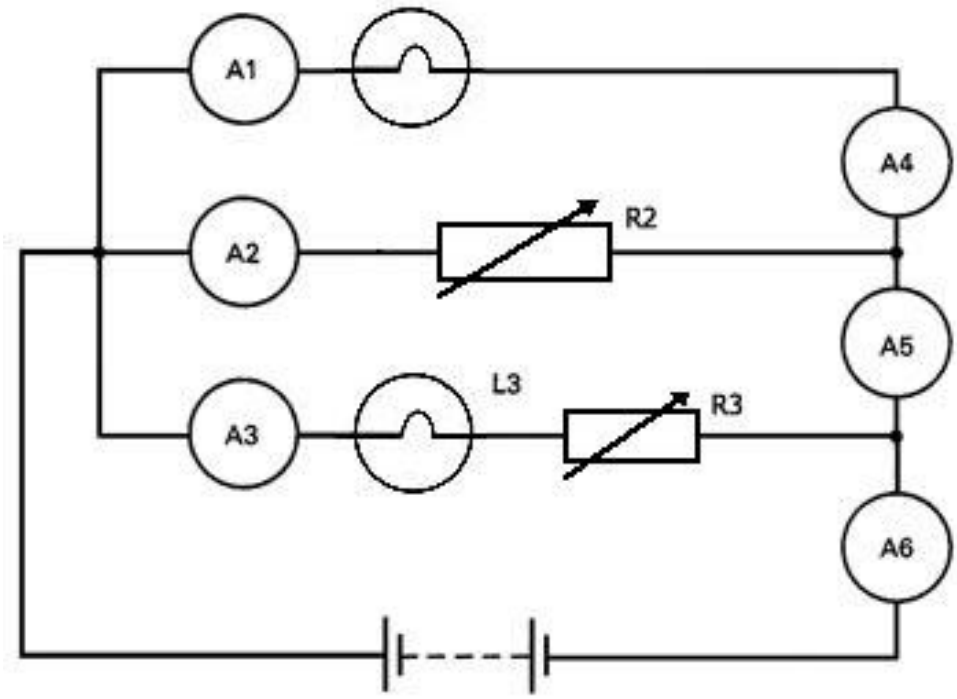

Specimen readings:

With a 12 V battery and 12 V, 6 W lamps, A1 will read 0.5 amps.
Adjust R3 so that A3 reads 0.3 amps, and R2 so that A2 reads 0.2 amps.
Then A4 reads 0.5 amps, A5 0.7 amps, and A6 1.0 amps.

Teaching notes

---

1 Throughout these experiments, the idea of 'positive flow' of charge is assumed, i.e. flow from the positive terminal of the power supply to its negative terminal.

2 We know from simple series circuits that something is the same all round the circuit. This is because similar lamps light equally all round it, and an ammeter changed from one place to another in a series circuit gives the same reading. That something, which is the same all round the circuit is called the 'current', because that experimental property corresponds to a similar property for water in pipes.

3 With the water analogy in mind, think of the wires of the circuit as full of something that can be made to move once a battery is applied. That something, which we suppose fills the wires and is ready to move, is called electric charge and it is measured in coulombs. See also the Water circuit [2] experiment.

4 In parallel circuits, the total current entering a junction is equal to the total current leaving it. Current does not get lost when a circuit divides into branches which then re-unite.

This experiment was safety-checked in October 2006

Related guidance

Quantitative ideas in electricty [3]

Related experiments

Water circuit [2]

Source URL: http://www.nuffieldfoundation.org/practical-physics/series-and-branching-circuits

Links:
[1] http://www.nuffieldfoundation.org/node/1634/
[2] http://www.nuffieldfoundation.org/node/3265
[3] http://www.nuffieldfoundation.org/node/1823